PART NO	SG - 1626 - 09	
DESCRIPTION	Without terminals.	
PINS	0	
MATERIAL	Aluminium	
WIDTH	263 mm	
LENGTH	162 mm	
HEIGHT	90 mm	
COLOUR	Grey	
IP	6	Complete protection against entry of dust.
	7	Protection against temporary immersion.

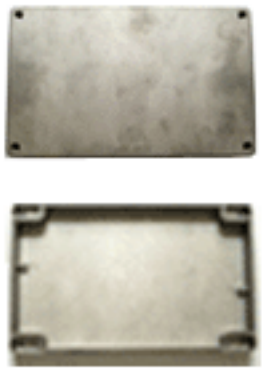

FEATURES
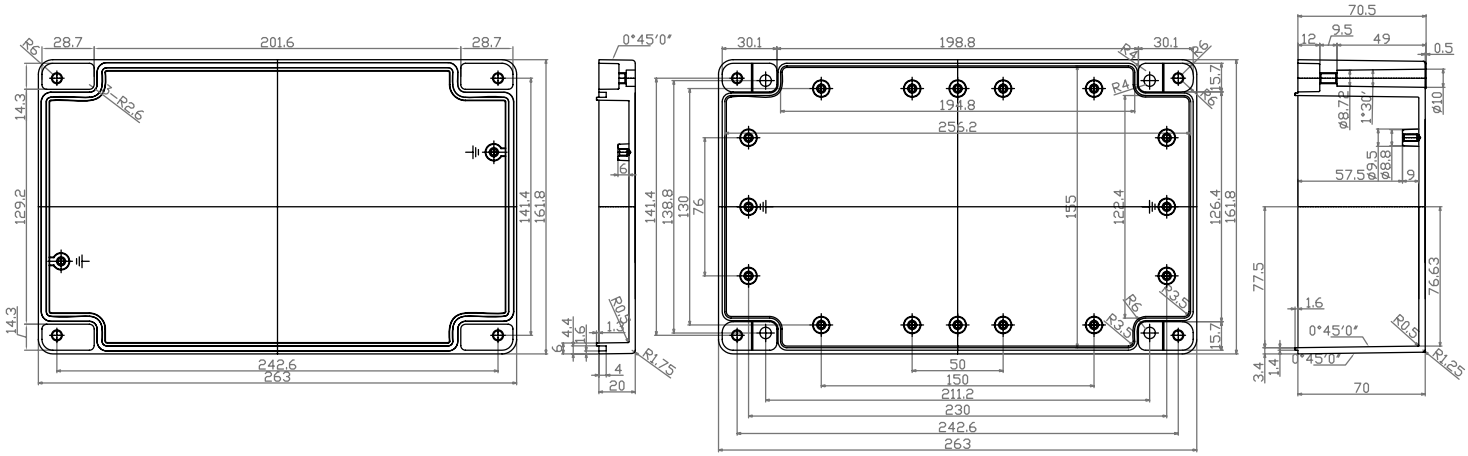
- Heavy Duty Aluminium Housing.
- Ideal for custom terminal boxes.