Leuze lumiflex

SCAN-C

Messender Lichtvorhang
Anschluß- und Betriebsanleitung

Measuring Light Curtain
Connecting and Operating Instructions

601525-08/02 Technische Änderungen vorbehalten / Subject to change without prior notice

Notes on using these connection and operating instructions

This manual contains information regarding the proper and effective use of SCAN-C measuring light curtains. It is included in the scope of delivery.

Safety precautions and warnings are designated by the symbol .

Leuze lumiflex GmbH + Co. KG is not liable for damage resulting from improper use of its equipment. Familiarity with these instructions constitutes part of the knowledge required for proper use.

© Reprint and reproduction, in whole or in part, only with the explicit permission of

Leuze lumiflex GmbH + Co. KG
Liebigstraße 4
D-82256 Fürstenfeldbruck
Tel. 0 81 41 / 53 50 - 0
Fax 0 81 41 / 53 50 - 1 90
E-Mail: lumiflex@leuze.de
http://www.leuze.de

ENGLISCH

Table of Contents

1 System Overview and Range of Applications 22
1.1 System Overview 22
1.2 Range of Applications 23

2 Safety Precautions 24

3 Configuration and Function 24
3.1 System Configuration 24
3.2 Function 24
3.3 Display Elements 25
3.4 Switch Output Measurement Field Status 25
3.5 RS 485 Data Interface 25
3.6 Driver Program for the PLC Control (e.g. Siemens S7-200) 27

4 Mechanical Installation 29

5 Electrical Installation 30
5.1 Supply Voltage 30
5.2 Electrical Connections and Terminal Assignment 30

6 Start-up 32

7 Cleaning 32

8 Technical Data and Dimensional Drawings 32

9 Selection and Ordering Information 35
9.1 Device Designation 35
9.2 Order Numbers and Accessories 35

10 Declaration of Confirmity 37

ENGLISCH

1 System Overview and Range of Applications

1.1 System Overview

SCAN-C light curtains consist of a transmitter and a receiver. Like a light barrier, they work with modulated infrared light and stand out due to the following features:

- Measurement field up to 6 m wide, from 300 to 2100 mm high
- 10 mm beam distance
- Can be connected directly to an PLC control (such as the Siemens S7-200)
- PNP switch output for measurement field status free/occupied
- Simple connection due to M12 connector

1.2 Range of Applications

The scope of SCAN-C applications ranges from simple detection or measuring tasks, such as controlling projection or the presence of an object, to contour or shape recognition.

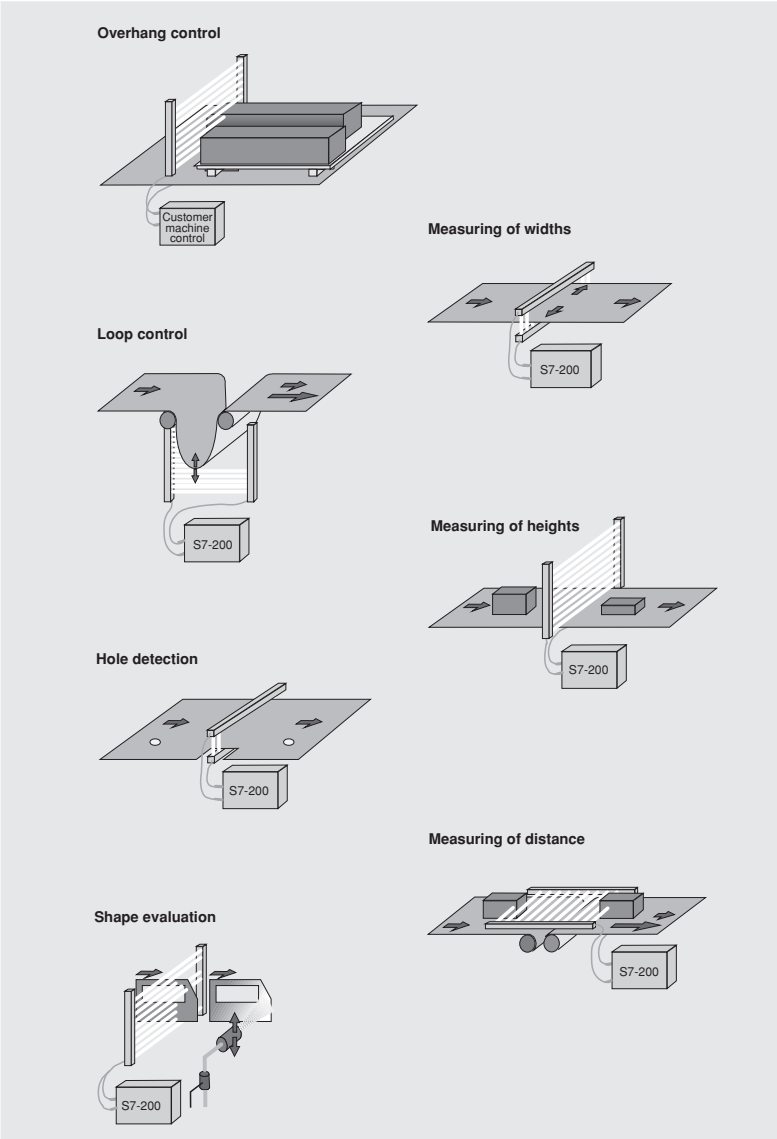

Fig. 1: Examples of Applications Using the Measuring Light Curtain SCAN-C

ENGLISCH

2 Safety Precautions

SCAN-C light curtains are **not** active optoelectronic protective devices (AOPD) in accordance with IEC 61496-1, -2 and are thus **not** suited for personnel protection.

3 Configuration and Function

3.1 System Configuration

SCAN-C light curtains consist of a transmitter equipped with a number of sequentially controlled IR radiation elements aligned in a row, and a receiver equipped with a number of sequentially controlled receiver elements, likewise aligned in a row. The parallel light axes projected between the transmitter and receiver create a measurement field with a resolution of 30 mm. The receiver has a switch output for performing simple detection tasks as well as a serial data interface for transmitting measurement values to a control system for further processing. A driver program is available that enables SCAN-C to be connected directly to the Siemens S7-200. Drivers for controls from other manufacturers can be produced upon request.

Figure 2 shows the system configuration of SCAN-C.

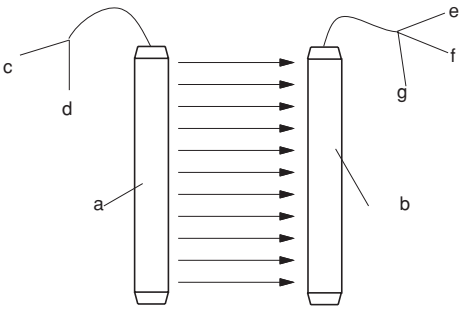

a	=	SCAN-C transmitter	e	=	+24 V
b	=	SCAN-C receiver	f	=	0 V
c	=	+24 V	g	=	RS 485
d	=	0 V			

Fig. 2: SCAN-C

3.2 Function

After the supply voltage is applied, the infrared light axes are controlled and evaluated individually in quick succession. The measurement value of each light axis (“light path unobstructed” or “light path interrupted”) is output either as an aggregate signal at the switch output or as a single measurement value within a serial data stream via the RS 485 interface of the receiver.

3.3 Display Elements

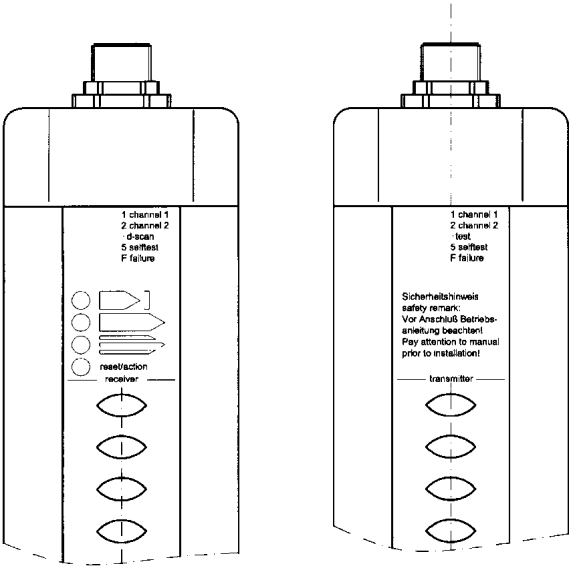

a = Object in the measurement field or device out of alignment
b = Measurement field unobstructed
c = Failure in the receiver
d = Supply voltage / Transmitter on
e = Failure in the transmitter

Fig. 3: Display Elements

3.4 Switch Output Measurement Field Status

The short-circuit-proof 24 V pnp switch output on the receiver is able to switch earthed loads of up to 0.1 A. Contactors or relays must be wired parallel to the coil with suitable components for suppressing interference.

3.5 RS 485 Data Interface

The signal statuses of the individual light axes (“light path unobstructed” or “light path interrupted”) are transmitted as a serial data stream over the RS 485 interface. The transmission takes place in half duplex mode at 19.200 baud in the Leuze lumiflex-specific protocol described below.

The data packet cyclically transmitted by the receiver is configured as follows:

Start identifier	(STK)	1 byte
Length of the entire packet	(LDP)	1 byte
Status	(STA)	1 byte
Beam number	(STZ)	1 byte
Usable data (light path unobstructed)	(NDT)	1..30 byte

ENGLISCH

CRC (8 Bit) (CRC) 1 byte

Description:

STK: start identifier constant 0BH
LDP: dependent on the beam number (min.9 , max.35)
LDP = 1 byte(STK) + 1 byte (LDP) + 1 byte (STA) + 1 byte (STZ)
+ x byte (NDT) + 1 byte (CRC)
where: x [NDT] = (STZ/8) rounded up to the next full byte.

Example:

STZ = 35:
--> x [NDT] = (35/8) = 4,375 --> x [NDT] = 5 --> LDP = 5 + 5 = 10

STZ = 162:
--> x [NDT] = (162/8) = 20,25 --> x [NDT] = 21 --> LDP = 5 + 21 = 26

STZ = 240:
--> x [NDT] = (240/8) = 30,0 --> x [NDT] = 30 --> LDP = 5 + 30 = 35

STA:
Bit 0: 0 = no error , 1 = error/message (in normal operation Bit 0 = 0)
Bit 1: 0 = (internal information)
Bit 2: 1 = (internal information)
Bit 3: 0 = strong receiver signal, 1 = weak receiver signal
Bit 4..5: free
Bit 6: 0 = object in the measurement field,
1 = all light paths unobstructed
Bit 7: 0 = (internal Information)

In case of an error/message (Bit 0 = 1):
Bit 1..5: error number
Bit 6..7: free

In case of an error/message, the error number determines the contents of the usable data:

Error numbers 0..30: Usable data (NDT) 1 byte with an indication of the error location (LOC)
Error numbers 31: Usable data (NDT) max. 250 bytebyte with copyright message

STZ: Beam number 1..240

NDT: (error/message bit = 0):
only beam data
beam 1: LSBit byte1 ... beam 240: MSBit byte30 in block
x: 0 = beam interrupted , 1 = beam unobstructed

Example:

STZ = 35: --> 5 bytes of beam data
NDT = xxxxxxxx xxxxxxxx xxxxxxxx xxxxxxxx 00000xxx

CRC: 8 Bit CRC with generator polynomial 19B hex.
The CRC sum is arrived at by means of STK, LDP, STA, STZ, NDT.

Example of a complete send string:

64-beam unit,
beams 1..10 no reception,
eams 40..50 weak reception,
object in the measurement field,
no error:
0BH, 0DH, 0CH, 40H, 00H, FCH, FFH, FFH, FFH, FFH, FFH, FFH, 58H

3.6 Driver Program for the PLC Control (e.g. Siemens S7-200)

An PLC-specific software module is required in order for the control to be able to accept the measurement data. The program configuration is clearly shown by the following example of the driver for the Siemens S7-200 control. Based on the transmission protocol described above, drivers for other controls can be easily created by any programmer familiar with that particular control. Leuze lumiflex would be happy to lend support in this regard and is endeavoring to gradually offer drivers for other well-known controls.

The following example illustrates the program structure of the software module. The corresponding program listing in STEP7/Micro is available upon request.

The driver program, which functions as an interrupt module, takes over the SCAN-C measurement data as a serial data stream at Port 0 and deposits them in a data buffer. The individual light axis are made available to the user bit-by-bit beginning at memory position VB20 (1 = light, 0 = no light), continuing from the first light axis (at the SCAN-C connection) to the last light axis (at SCAN-C´s free end).

When a data packet has been successfully received, the driver program sets the marker „M_Userbuffer_ready“. Since this marker can be deleted by the user program after the measurement values have been read in, it can be used to control the data receiption.

The entire memory area of the PLC is availabe to the user program, with the exception of the variable memory VB0 ... VB50 and the marker bit M0.0.

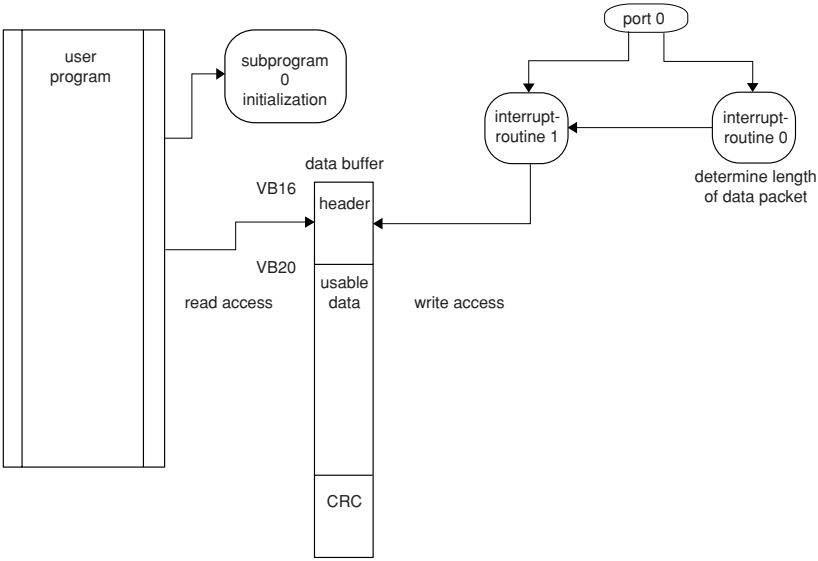

Fig. 4: Software module for data acceptance by the Siemens Simatic S7/200

4 Mechanical Installation

The units are mounted using M6 T-slot nuts with an M6 thread, which is inserted from the side into the longitudinal grooves. The M6 T-slot nuts can be freely adjusted and allow the unit to be aligned along the longitudinal axis. These nuts are fitted with a retainer spring to prevent the elements from accidentally slipping when the screws are being tightened and in order to make the mounting easier.

Two different types of mounting brackets are available for installation:

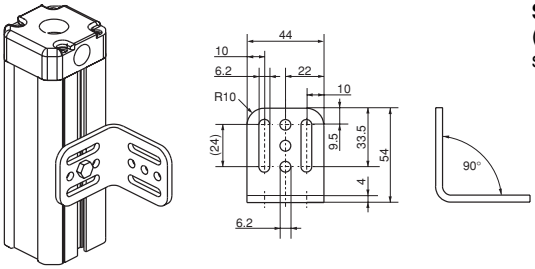

Standard mounting bracket
(included in the scope of supply)

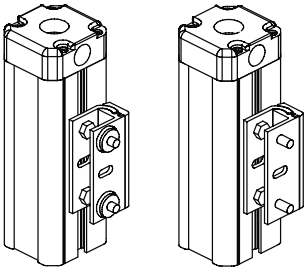

Swivelling mount with absorption of vibration
(Also permits rotation of the unit about the lengthwise axis and reduces the effects of vibrations and shocks)

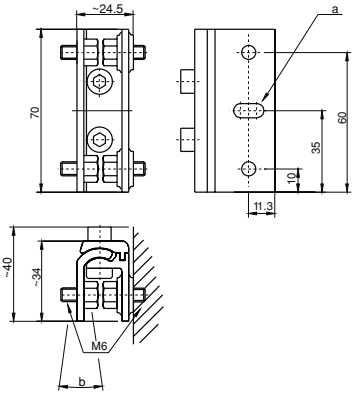

a = oblong punch 13 x 6
b = rotation area

Fig. 5: Mechanical mounting for SCAN-C measuring light curtain

ENGLISCH

5 Electrical Installation

5.1 Supply Voltage

The transmitter and receiver must be supplied with 24 V DC +/- 20 %. The maximum power consumption is 150 mA (without load). The power supply must exhibit a safe mains separation in accordance with IEC 60742 and be able to bridge short-term mains failures of up to 20 ms.

5.2 Electrical Connections and Terminal Assignment

The connections are made using shielded connecting cables with M12 connectors (available as accessories). There are two possible types of connection. Either the transmitter and receiver can be connected to the control cabinet via separate cables (M12 plug at one end), or they can be joined via an M12 Y-distributor and then connected to the control cabinet by means of a joint connecting cable (see Accessories).

The shield must be connected to PE. The cables must be laid separately from mains power cables. The following tables show the terminal assignments of the transmitter and receiver.

SCAN-C Transmitter		
M12 Connector	**Wire color**	**Meaning**
1	white	+24 V
2	brown	PE
3	green	0 V
4	yellow	free
5	grey	free
6	pink	free
7	blue	free
8		Protective shield/PE

SCAN-C Receiver		
M12 Connector	**Wire color**	**Meaning**
1	white	+24 V
2	brown	PE
3	green	0 V
4	yellow	Switch output
5	grey	“Weak signal”, “Failure”
6	pink	RS 485+
7	blue	RS 485-
8		Protective shield/PE

5.2.1 SCAN-C as a Switching Light Curtain in Stand-alone Operation

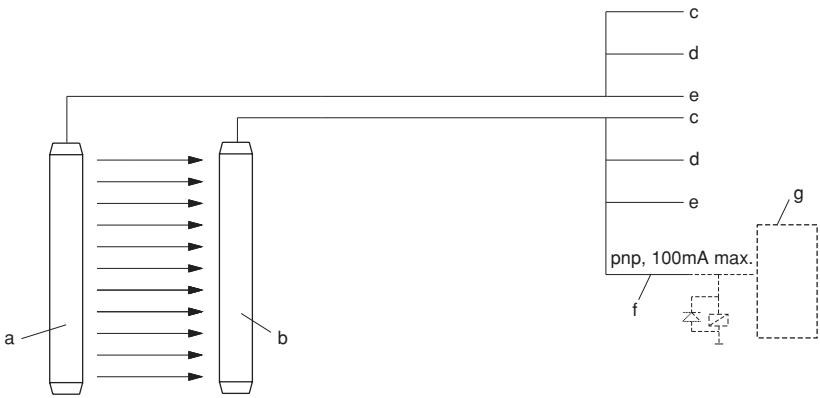

a	=	SCAN-C transmitter	e	=	shield/PE at control cabinet ground
b	=	SCAN-C receiver	f	=	pnp switch output
c	=	white at +24 V	g	=	PLC input
d	=	green at 0V			

Fig. 6: SCAN-C as a Switching Light Curtain in Stand-alone Operation

5.2.2 SCAN-C as a Measuring Light Curtain with the Siemens S7-200

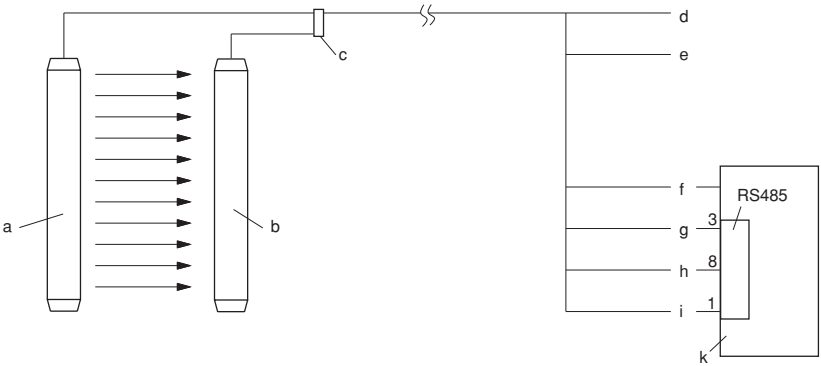

a	=	SCAN-C transmitter	g	=	pink (RS 485 +) at PLC-RS 485, Pin 3
b	=	SCAN-C receiver	h	=	blue (RS 485 -) at PLC-RS 485, Pin 8
c	=	M12-Y-distributor	i	=	shield/PE at PLC-RS 485, Pin 1
d	=	white at +24 V DC	k	=	PLC
e	=	green at 0 V			
f	=	grey (weak signal/error) at PLC input			

Fig. 7: SCAN-C as a Measuring Light Curtain in Combination with the Siemens S7-200

ENGLISCH

6 Start-up

- Before switching on the unit for the first time, check the supply voltage (24 V DC +/ - 20 %).
- Turn on the supply voltage (transmitter LED “power“ lights up).
- A self-test lasting approx. 2 seconds will be performed in the transmitter and receiver.
- In case of optimal alignment, only the green LED in the receiver will still be lit up.

If the green LED does not light up after 2 seconds, please check the following points:

- Make sure that there is no object in the sensing zone.
- If so, remove the object.
- Check the orientation of the units to each other. (Transmitter and receiver must be mounted at the same height, and the front screens must be exactly parallel to each other.)
- If the “failure” LED lights up in the transmitter or receiver, the corresponding component has an internal defect and must be replaced.
- For operation with Simatic S7-200:
  To activate the freely programmable communication over Port 0, the operating mode switch must be set at “RUN”. In the “TERM” position, the PPI protocol for communicating with the programming device is enabled. The entire memory area of the PLC, except for the variable memory VB0 ... VB50 and the marker byte M0.0, is available to the user program.

7 Cleaning

The front screens must be cleaned regularly, depending on the amount of dirt that has accumulated. The message output of the receiver indicates, at the latest, when cleaning is necessary. We recommend using a mild cleaning agent for cleaning the Plexiglas front screens. The Plexiglas front screens are highly resistant to diluted acids and alkalies, and are resistant to organic solvents to a limited extent.

8 Technical Data and Dimensional Drawings

Measurement field height	300, 900, 1050, 1200, 1350, 1500, 1800, 2100 mm *)
Measurement field width (range)	0.3 ... 6 m
Beam distance	10 mm
Number of light axes	33 - 250 (6 light axes per 150 mm measurement height)
Time required per light axis	200 µs
Enclosure rating	IP 65
Ambient operating temperature	0 ... 55 °C

Protection class	I
Supply voltage	24 V DC +/- 20 %
Current consumption	Transmitter: 75 mA, receiver: 150 mA
Switch output	pnp output, short-circuit-proof, 200 mA max
Data interface/Receiver	RS-485, 19 200 baud, half duplex mode
Electrical connection	8-pin round M12 plug-in connector
Connecting cable	7-pin, 0.25 mm^2, shielded, with injection molded connector, length 5 m or 15 m (see Accessories)
Dimensions	Cross-section 17 mm x 33 mm, Length (with connector and connecting area) = measurement height + 96 mm
Humidity	15 ... 95 % (non-condensing)
Storage temperature	-25 ... +75 °C

*) other measurement heights up to 3000 mm upon request

Dimensions, weight and response times for SCAN-C Measuring Light Curtain:

measuring field height Meas. A [mm]	Meas. B [mm]	Weight CMT+CMR [kg]	Response time [ms] n = standard; d = d-scan CM10 14	
			n	d
300	384	2,1	13	20
450	534	3,0	10	20
600	684	3,7	13	26
750	834	4,6	17	33
900	984	5,5	20	39
1050	1134	6,4	23	46
1200	1284	7,3	26	52
1350	1434	8,2	30	59
1500	1584	8,6	33	65
1650	1734	10,0	36	72
1800	1884	10,9	39	78
2100	2184	12,7		

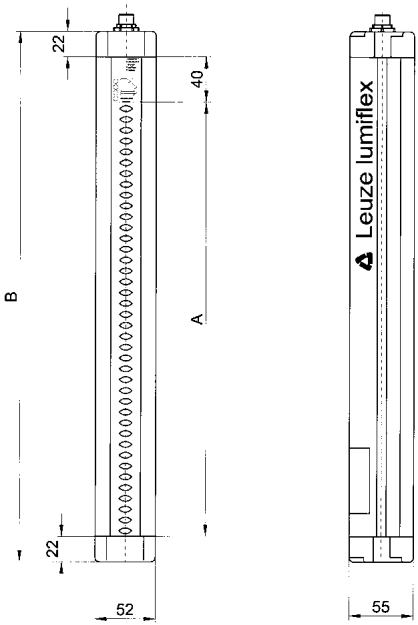

a = Mounting dimension
b = Clearance for removing the plug
c = Screw M5 or M5
d = End of sensing zone

Fig. 8: Dimensional Drawing of SCAN-C Series S30

9 Selection and Ordering Information

9.1 Device Designation

Example SR30-900 M
Ea bb-dddd e

S SCAN-C

a T = transmitter
R = receiver

bb Resolution [mm]

dddd Measurement height [mm]

e Only for cascadable units
M = master unit
S = slave unit

9.2 Order Numbers and Accessories

The scope of supply of a SCAN-C consists of:

- 1 SCAN-C transmitter CMT
- 1 SCAN-C receiver CMR
- 1 set of Connection and Operating Instructions

Order numbers

Type *)	Standard
CMT10-450 CMR10-450	511154 514154
CMT10-600 CMR10-600	511156 514156
CMT10-750 CMR10-750	511157 514157
CMT10-900 CMR10-900	511159 514159
CMT10-1050 CMR10-1050	511160 514160
CMT10-1200 CMR10-1200	511162 514162

Type *)	Standard
CMT10-1350 CMR10-1350	511163 514163
CMT10-1500 CMR10-1500	511165 514165
CMT10-1650 CMR10-1650	511166 514166
CMT10-1800 CMR10-1800	511168 514168
CMT10-2100 CMR10-2100	511171 514171

*) other measurement heights up to 3000 mm upon request

ENGLISCH

Order numbers

Type	Order No.
Driver program for the S7-200 control on 3.5 “ diskette	601120
Connecting cable (M12 plug/socket at each end), length 0.5 m[1)]	548501
Connecting cable (M12 plug/socket at each end), length 2 m [1)]	548502
Connecting cable (M12 plug/socket at each end), length 5 m [1)]	548505
Connecting cable (M12 plug/socket at each end), length 10 m [1)]	548510
M12 Y-distributor (for joining the transmitter and receiver cables into one common cable to the control) [1)]	548500
Connecting cable (M12 socket at one end), length 5 m [2)]	548405
Connecting cable (M12 socket at one end), length 15 m [2)]	548415
Mounting bracket with accessories (sold in sets of two) [4)]	560120
Swivelling mounting with vibration damping [4)]	560300

1) For wiring with a joint cable to the control cabinet are required:
1 cable from the transmitter to the distributor,
1 cable from the receiver to the distributor,
1 cable from the distributor to the control cabinet and
1 M12-Y-distributor

2) For wiring with two separate cables to the control cabinet are required:
1 cable from the transmitter to the control cabinet and
1 cable from the receiver to the control cabinet

3) Other heights upon request

4) 2 pieces each required for the transmitter and the receiver

ENGLISCH

ENGLISCH

Leuze lumiflex

EC Declaration of Conformity

according to EC Machine Directive 98/37/EC, Annex II C

We herewith declare,

Leuze lumiflex GmbH + Co. KG
Liebigstrasse 4
82256 Fürstenfeldbruck

that the following described components in our delivered version complies with the appropriate basic safety and health requirements of the EC Machinery Directive based on its design and type, as brought into circulation by us. In case of alteration of the components, not agreed upon by us, this declaration will lose its validity.

Description of the Component:	Measuring Light Curtain
Safety Component Type:	**SCAN-C**
Serial Number:	see type plate
Applicable EC Directives:	EC Low Voltage Directive (73/23/EEC) EC Directive of Electromagnetic Compability (89/336/EEC) As amended by 91/263/EWG, 92/31/EWG and 93/68/EWG
CE-marking:	The compliance with the directives 73/23/EWG and 89/336/EWG is certified by the CE.mrk.

Fürstenfeldbruck, 20. August 2002

ppa. Dr. Holger Lehmitz
Manager product unit
Safety at work

ppa. Werner Lehner
Manager product management

Leuze lumiflex GmbH + Co. KG
Liebigstraße 4
D - 82256 Fürstenfeldbruck
Telefon (08141) 5350 - 0
Telefax (08141) 5350 - 190
E-Mail: lumiflex @ leuze.de
Internet: http://www.leuze.de

Reg. Nr. 2002-02

Postbank München (BLZ 700 100 80) 185 734 - 807
Deutsche Bank (BLZ 700 700 10) 1972 900
UST-ID-Nr. DE 129 999 527

Kommanditgesellschaft, Sitz Fürstenfeldbruck, Amtsgericht München HRA 40417, pers. haftende Gesellschaft: Leuze electronic, Geschäftsführungs-GmbH, Owen
Amtsgericht Kirchheim/Teck HRB 560
Geschäftsführer: Michael Heyne, Dr. Harald Gröbel
Vorsitzender des Verwaltungsrats: Meinert Hahnemann